R9

RESIDENCE 9®

Installed beautifully by

THERMAGLAZE

FEELS LIKE HOME

WINDOWS & DOORS

THE WAY THEY'RE
MEANT TO BE™

*Photograph shows example of weatherbar/mullion stiffener

RESIDENCE 9

is a window and door system designed to authentically replicate 19th Century timber designs.

Residence 9 is a clever blend of old and new.
It fuses classic aesthetics with a twist of modern materials.

CLASSIC WITH A TWIST

The traditionally elegant flush exterior and stylish decorative interior create that classic aesthetic. The twist is a modern composite material which lends itself to the sometimes frantic pace of modern living by being virtually maintenance free; no painting or staining required!

It also has the added benefit of uniquely engineered ‘easy clean’ rebates which can be easily wiped clean meaning your windows remain looking their best with the minimum of effort, so you can spend more time doing the things you love.

SOPHISTICATED PERFORMANCE

A combination of design, innovation and technological advancement is how Residence 9 outperforms many other systems. It can accommodate triple or double, highly efficient glazed units with market leading thermal and acoustic performance. It achieved one of the highest classifications on the British Standard weather test due to its robust design, and has the option of steel reinforcements (if required) to attain the maximum sizes to recreate grand entrance screens through to exceptional bays.

BEST OF BRITISH

Residence 9 is proud to be designed and made in the UK. It was created with the enduring designs of British architecture in mind and has many bespoke options that can satisfy a range of homes from the grandeur of stately homes, to the solid good looks of Georgian and Victorian, right through to the present day. As well as a stunning range of windows, it can be incorporated into fabulous French, Residential and Composite doors and elegant Orangeries and Garden Rooms. All of these are available in a handpicked collection of heritage colours that can be personalised to match existing furnishings by choosing a different colour inside to outside.

Uncover Your R9 journey here...

WINDOWS

THE WAY THEY’RE MEANT TO BE™

R9®

HERITAGE

Residence 9 can tick all the boxes for your property. It is designed to replicate the flush timber designs found in heritage properties in our towns, villages and cities. It enables you to replace your windows and doors with an authentic design and in heritage colours, without losing the character appearance and feel of the period. Crucially, you can now achieve this in a virtually maintenance free composite material, no more painting and staining, leaving you time to enjoy your beautiful home.

BESPOKE

Make your windows and doors truly individual by selecting dual colours, complement your interior designs by tailoring your internal colour by room and choose an external colour that creates the signature first impression to suit your exterior. There are a variety of hardware designs to choose from, whether your style is contemporary or period. Further options include Georgian bar and weatherbar/mullion stiffener, both of which can be added to replicate existing or add new character to your home.
Design your perfect solution
with Residence 9.

TRADITIONAL

Residence 9 is an eclectic blend of traditional aesthetics and innovative design.
Whatever period your property is we know your Residence 9 windows and doors will look great, as we copied historical design and considered conservation guidelines, which authentically replicate the traditional timber sightlines. You'll immediately notice the benefits of the thermally efficient 9 chamber design and modern glazing, whilst retaining the character of your home, traditionally transformed by Residence 9.

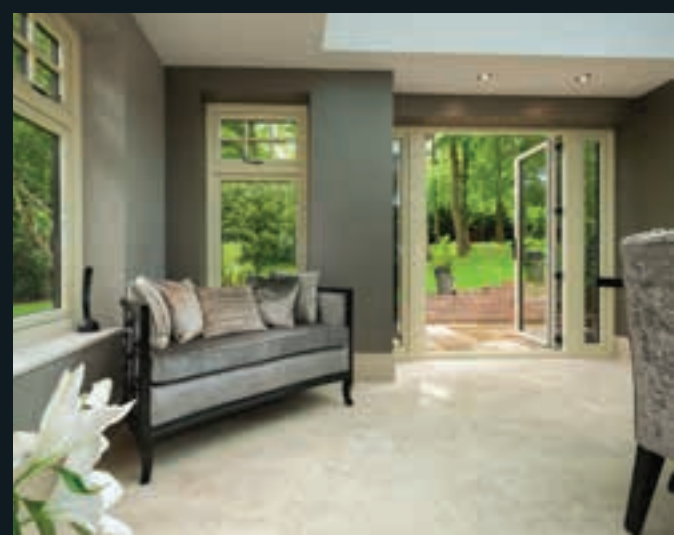

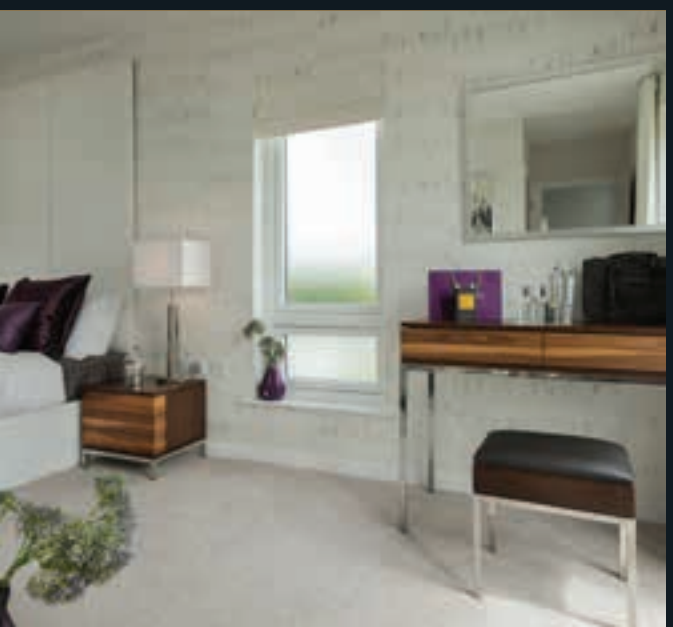

MODERN

Whether you are embarking on a new build project or renovating an old, Residence 9 windows and doors perfectly embody both traditional and modern homes. The blend of timeless styles, configurations and colours allied with modern British craftsmanship will give you the peace of mind to enjoy your home. It is so easy to maintain the fresh look of your new home due to the exclusively designed ‘easy clean’ rebates, simply wipe clean and no painting or staining with the modern composite material.
Choose Residence 9 for a splendid outlook, for years to come.

QUINTESSENTIAL

Residence 9 encapsulates British qualities. Lovingly designed at the Residence head office in Gloucestershire, once you have chosen your personalised configurations, your windows and doors are hand crafted by chosen fabricators in and around Britain, before being fitted by your preferred Residence 9 installer. Quintessentially yours.

HAND FINISHED DETAILING

19th Century timber windows were hand crafted and in order to truly replicate the features of this window style, Residence 9 combines the repeatability of modern machining processes with the eye of a craftsman. Residence 9 windows and doors are hand finished and undeniably authentic with the stunning flush appearance, redefining modern windows and doors.

PERFORMANCE

Residence 9 has unquestionable market leading design features and performance.
It achieves a certified window energy A+ rating and accommodates the most thermally and acoustically efficient 44mm triple glazing and 28mm double glazing, attaining U-values of 0.8 with triple glazing, PassivHaus Standard and 1.2 with double glazing, far surpassing the British Building Regulation requirements. All of this contributes to lower energy bills, keeping you cosy in the winter and cool in the summer.

GLASS BONDING

Residence 9 windows and doors are predominantly "glass bonded" (shown in red). The best windows in Europe are glass bonded and many of the World's most famous modern skyscrapers utilise glass bonding technology. With the glass bonded to the sash and with the bead on the inside it contributes to high security performance. Glass bonding also significantly improves the overall strength of the product, resulting in trouble-free operation for years to come.

LOCK AND HINGE RETENTION

Residence 9 is made to CEN A wall thickness. This is the highest classification in Europe. Together with intelligent design details and screw retention reinforcements, locks and hinges are secured firmly into position. Residence 9 is also specifically designed to accommodate the additional weight of triple glazed units, allowing heavy duty hinges to fit and operate perfectly.

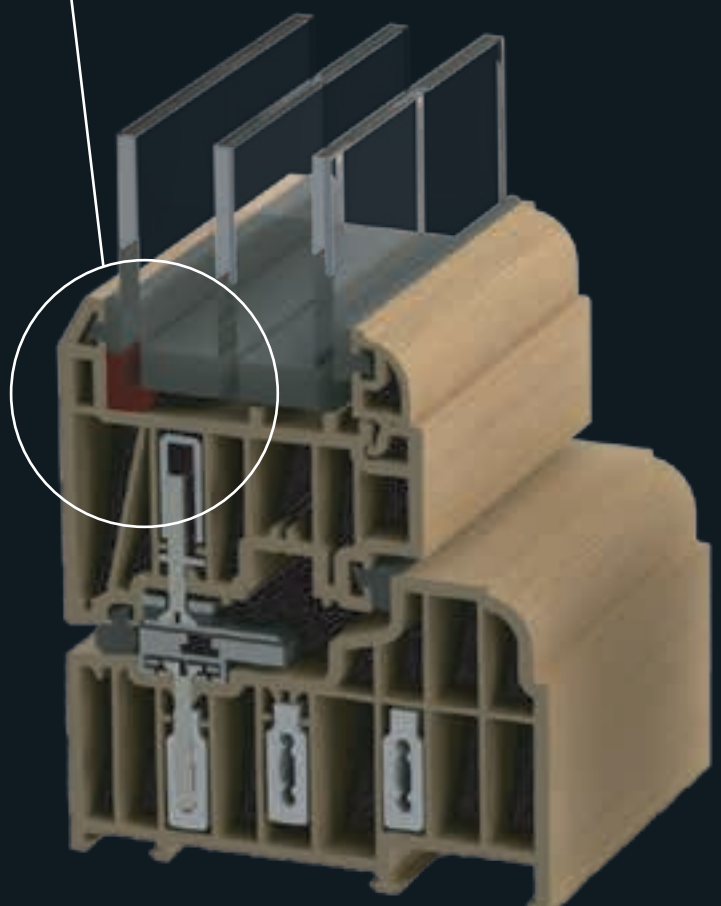

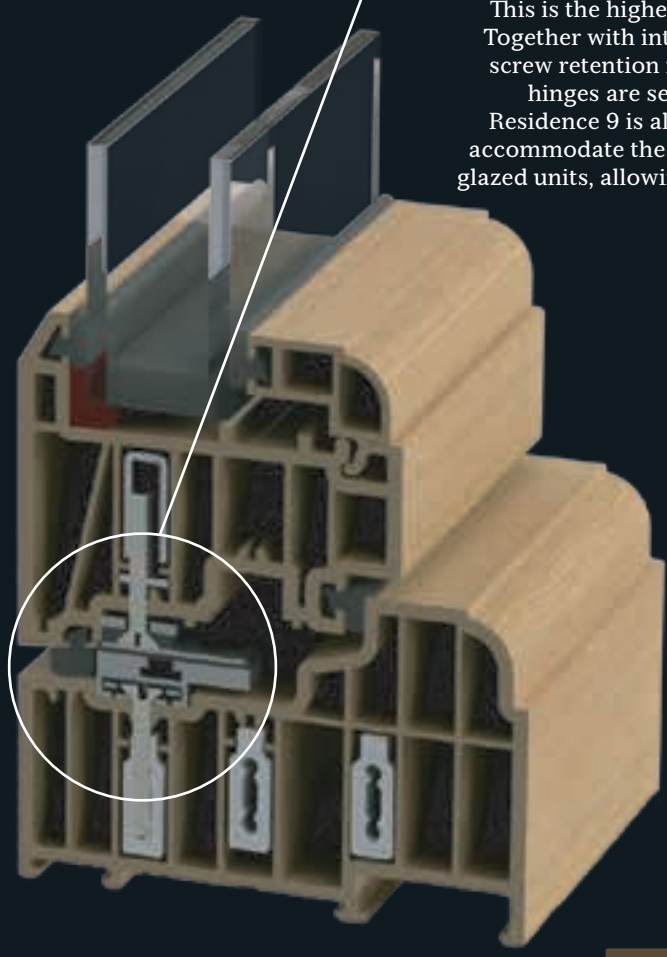

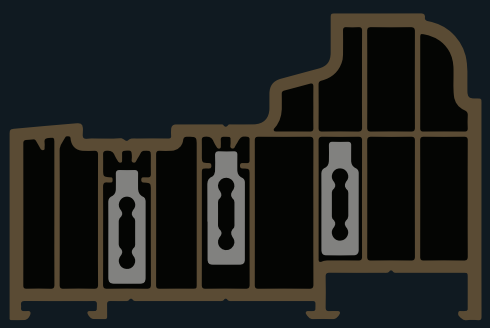

9 CHAMBER DESIGN

Residence 9 is engineered to meet current and anticipated future standards. Other window frames are typically 3 or 5 chambers and are usually 70mm wide, Residence 9 has 9 chambers and is 100mm wide, resulting in superior thermal, acoustic, strength and security performances.

PERSONALISE

Your Residence 9 windows, doors and orangeries are not only stylish, they will withstand the test of time too. They include state of the art design features and champion British craftsmanship using time honoured traditions and modern manufacturing processes. With a range of splendid styles and configurations, Residence 9 allows you to create an individual design statement for your home. Choose from a vast colour palette and a series of decorative options to truly personalise your Residence 9.

TRADITIONAL SIGHTLINES

If you are looking for kerbside appeal, look no further. The flush sash exterior is timeless and all the glass sightlines are perfectly equal providing symmetry and style not available in other window systems. The internal shape and depth is completely authentic and gives an elegant and distinctively deep appearance.

FOILED 'EASY CLEAN' REBATES

Residence 9 is intelligently designed with an 'easy clean' rebate which is fully foiled to match the chosen internal colour of your window. This unique design makes it easy to wipe clean by avoiding sharp corners, which attract dirt.
A classic design, for modern living.

GEORGIAN BAR

Residence 9 has beautifully bespoke sections that typically replicate deep decorative detailing inside and the chamfered putty line outside. With the Residence 9 Georgian Bar you can recreate the pattern of the original windows to preserve your home's character or add new personality with the flair of designing your own patterns.

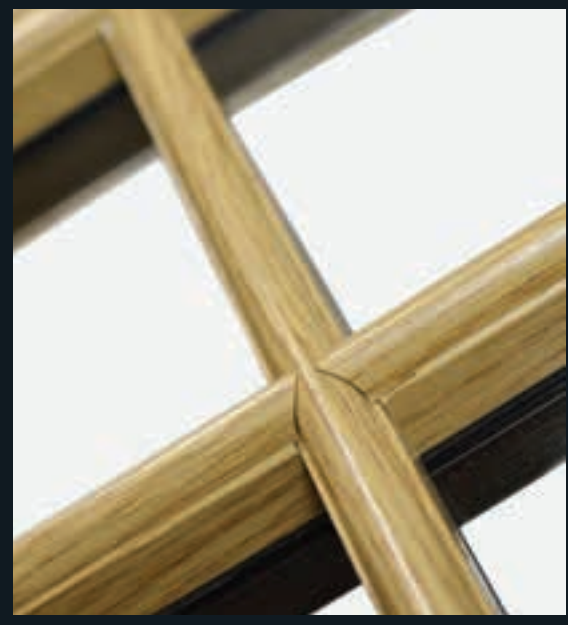

In order to meet modern building regulations and because we are not constrained by glass technology of the period, Residence 9 is made from complete pieces of glass where glazing bars are clad to the glass rather than making individual, small glass units. Internal spacer bars give the appearance of individual units, with the performance of a single, larger sealed unit.

HANDLES & STAYS

Personalise your Residence 9 windows with a choice of handles and peg stays, all sourced in the UK. The individually hand forged R9 Monkey Tail and R9 Pear Drop designs, available in Black or a gorgeous Pewter Patina, are ideal for recreating a traditional period allure. For a more contemporary appearance the R9 Monkey Tail and R9 Tear Drop designs are available in Hardex Gold, Hardex Chrome, Hardex Graphite and Antique Black. The R9 Monkey Tail is also available in the additional colour of Painted White (exclusive to Residence 9).

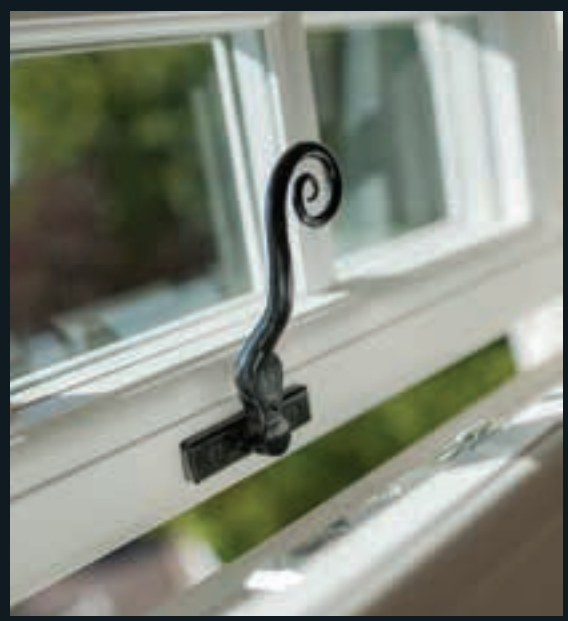

AUTHENTIC BUTT HINGE

Butt Hinges can assist in retaining the original timber window aesthetic or recreating as a new feature. Choose from working butt hinges or dummy butt hinges, both provide an authentic kerbside appearance. Working butt hinges also have the added advantage of a perfectly clear opening, which can be an ideal solution for fire escape windows.

WEATHERBAR/ MULLION STIFFENER

Old timber windows often had a raised moulding that ran horizontally, this bar looked distinctive and gave the windows depth and character. Its function was to shed dripping water and to increase the strength of the mullion, that's why we recreated the feature with Residence 9, time served traditional performance and aesthetics.

For further information on the Residence 9 Hardware Range please request a copy of the Hardware brochure.

AUTHENTIC CILL DETAIL

Old timber cills were deep and often aligned with a course of bricks. The Radlington Cill is the modern interpretation of a timber cill, designed to authentically accompany your Residence 9 windows and doors so you can recreate that stunning traditional look in both modern and period homes.

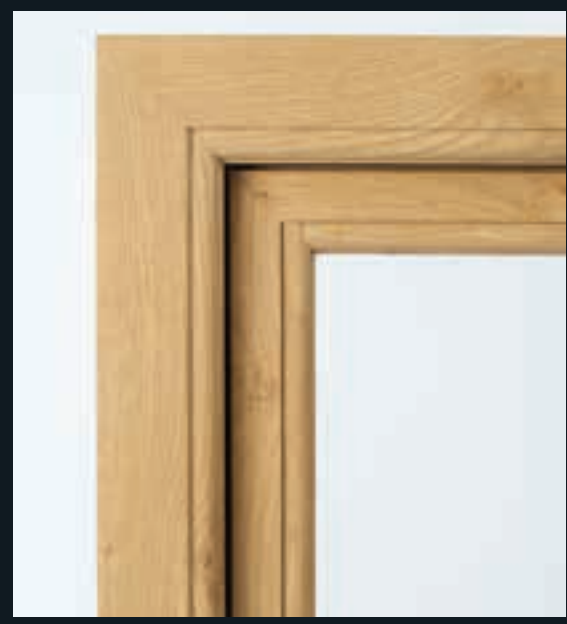

BAYS AND CORNERPOSTS

From elegant Edwardian to grand Georgian to majestically Modern. Contemporary and traditional bay windows and orangeries can be sympathetically recreated using Residence 9's stunning fluted cornerposts and defined plinth detailing or a range of decorative trims to suit multiple bay angles and designs.

MANUFACTURING TECHNIQUES

Residence 9 embraces modern manufacturing, therefore two techniques of British craftsmanship can be offered. The mechanical detail below shows how the joints butt together to replicate timber, above is the more modern alternative of welding, which fuses the joints diagonally. Both offer the same features and benefits of Residence 9, albeit with a differing finished appearance.

PLANNING & CONSERVATION

The design brief for Residence 9 was to extract the key principles, shapes and dimensions from the Article 4 Conservation Area guidelines for windows and integrate market leading technology into the design using virtually maintenance free materials. Residence 9 is thermally and acoustically brilliant. It features the latest security, maintenance and performance innovations, whilst appearing traditional. Your windows and doors won't warp, swell, flake or need sanding and painting.

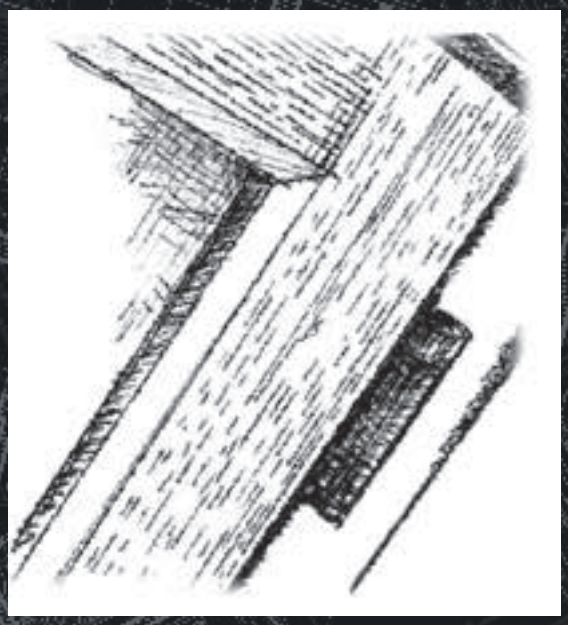

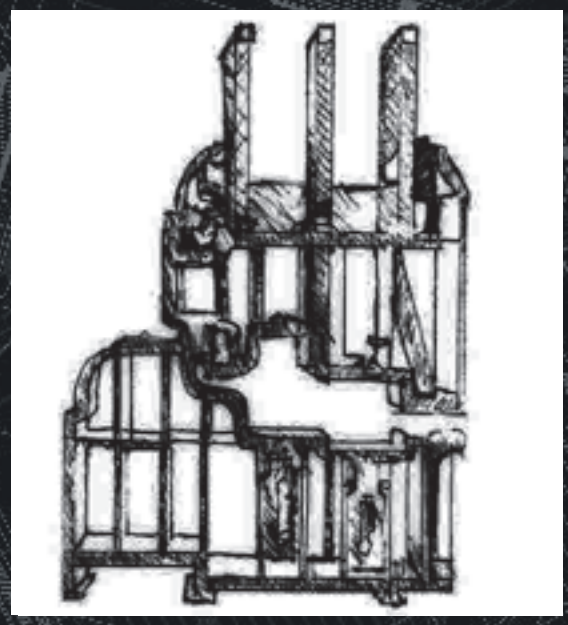

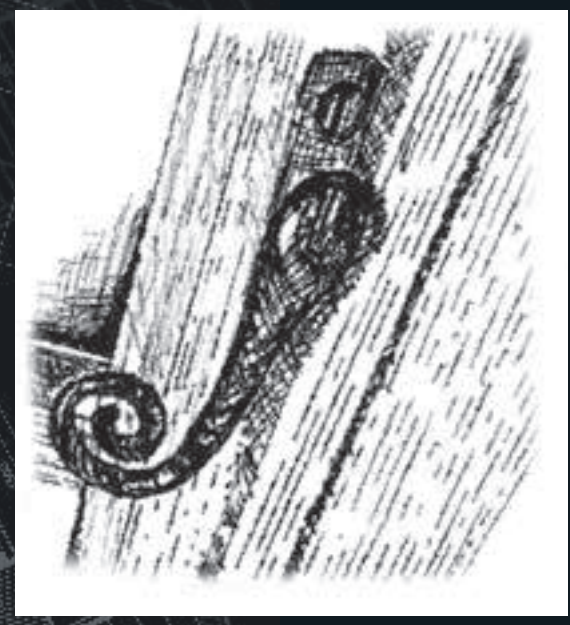

YOUR R9

The Residence 9 Graduate Collection is a range of colours and shades to suit different architectural periods and individual choices. 17th Century windows were oak and left unpainted, whilst 19th Century windows were always painted. The inspirational dual colours can transform your home room by room, creating your perfect solution, this is your Residence 9.

THE GRADUATE COLLECTION

Grained White

Cotswold Biscuit

Clotted Cream

Cotswold Green

Painswick

English Oak

Irish Oak

Silvered Oak

Golden Oak

Rosewood

Eclectic Grey

No 10 Black

Corse Lawn

Vintage Cream

Matt Finish - Unfoiled

The print process may not give a 100% accurate colour representation of the actual finish. Furthermore, the finishes have different textured grains. For this reason it is recommended to visit a Residence 9 showroom to see actual swatches of the finishes available.

INSIDE COLOUR

OUTSIDE COLOUR

DUAL COLOURS

Your R9 windows can be truly personalised with dual colours. For example, you could have “Clotted Cream” on the outside and “English Oak” on the inside to match your kitchen décor. Experiment by room, if your windows are “Cotswold Green”, but that doesn’t match your bedroom or bathroom furnishings, then go for a fresh “Grained White” finish inside. Dual Colours can also be used to create a Tudor style, try “No.10 Black” frames with “Grained White” sashes or vice versa!

WINDOWS & DOORS

THE WAY THEY'RE MEANT TO BE™

Visit www.residence9.co.uk to –

Visualise your dream designs with the 'Residence 9 Window Designer'
Enter your postcode to find your nearest Residence 9 installer and showroom*
Relax and watch our 'Day viewed through Residence 9' video which will take you from sunrise to sunset

In addition to this brochure we have a range of supplementary material including –

Case Studies of Edwardian Splendour, The Rectory, Country Pile, Bespoke and more
A dedicated information guide on Solutions for Planners and Homeowners in Conservation Areas
Residence 9 Hardware
The Graduate Collection Colour Palette
A foil swatch showcasing a sample of each of the colours from the Graduate Collection

Like our Facebook page for inspirational galleries and quintessentially British ideas
www.facebook.com/Residence9

For any further information please call the Residence9
Head Office on 01452 300912 or email us at journey@residence9.co.uk

Issue 3 - September 2015

Design by Colour Connection www.colourconnection.co.uk

Your Residence 9 journey is just beginning...

RESIDENCE 9®

Eclectic SYSTEMS

PART OF THE DW3 PRODUCTS GROUP

#R9journey

/R9journey
@Residence9
/Residence9

journey@residence9.co.uk
01452 300912
www.residence9.co.uk

RESIDENCE 9 AND R9 ARE REGISTERED UK TRADE MARKS OF WINDOW WIDGETS (2006) LIMITED

*Your chosen installer should do a professional survey and advise on the suitability of Residence 9 in your property and/or area.